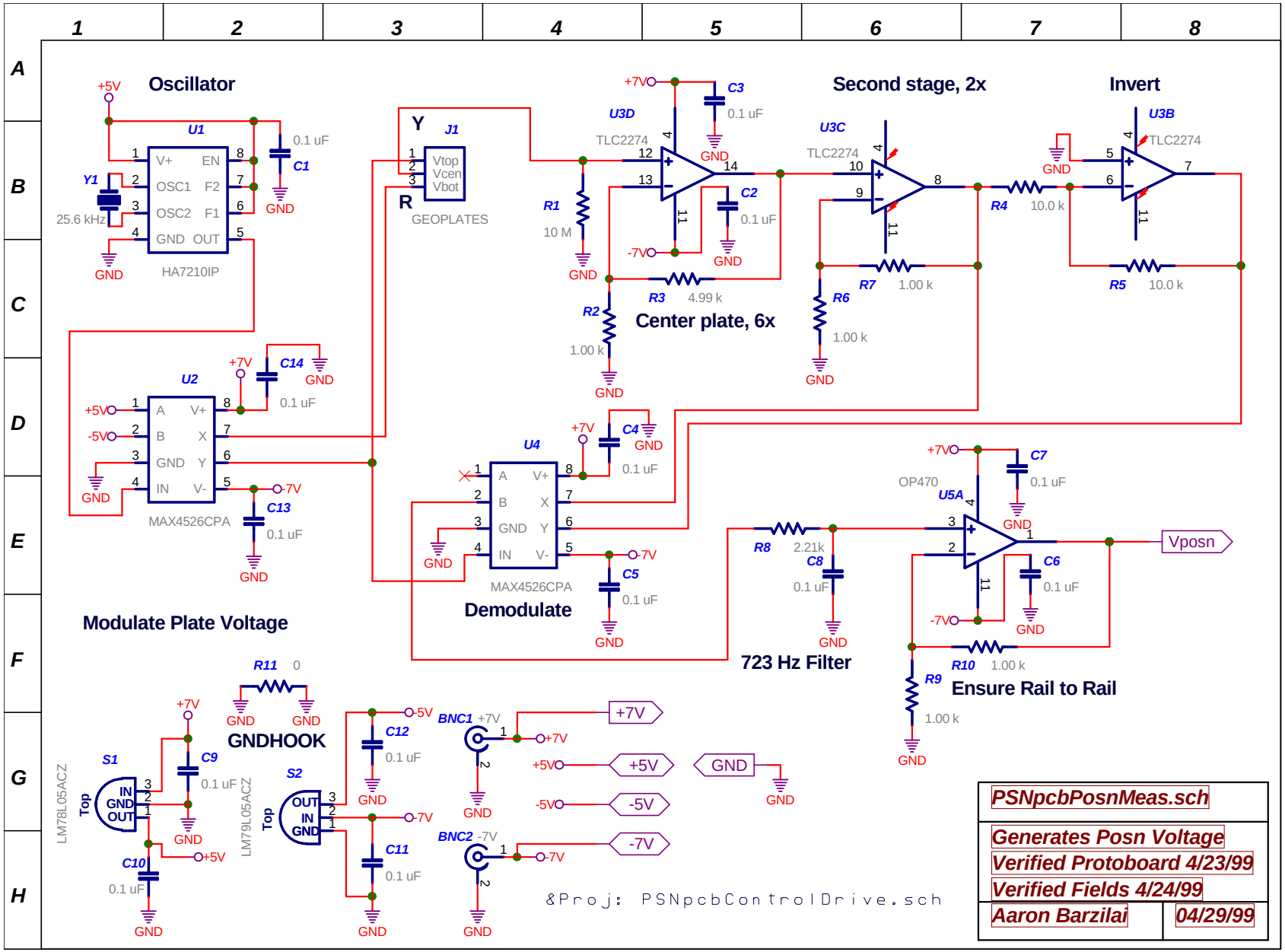
Oscillator
U1
HA7210IP
Y1
25.6 kHz
C1
0.1 uF
GND
+5V
Y
J1
Vtop
Vcen
Vbot
R
GEOPLATES
U2
MAX4526CPA
C13
C14
Modulate Plate Voltage
U3D
TLC2274
C3
C2
R1
10 M
R2
1.00 k
R3
4.99 k
Center plate, 6x
Second stage, 2x
U3C
R6
R7
1.00 k
Invert
U3B
R4
10.0 k
R5
U4
MAX4526CPA
C4
C5
Demodulate
R8
2.21k
C8
723 Hz Filter
U5A
OP470
C7
C6
R9
R10
Ensure Rail to Rail
Vposn
R11
0
GNDHOOK
S1
LM78L05ACZ
C9
C10
S2
LM79L05ACZ
C12
C11
BNC1
BNC2
+7V
+5V
-5V
-7V
&Proj: PSNpcbControlDrive.sch
PSNpcbPosnMeas.sch
Generates Posn Voltage
Verified Protoboard 4/23/99
Verified Fields 4/24/99
Aaron Barzilai
04/29/99